BONZER Mechanical

GLOBAL VIBRATION SYSTEM SOLUTIONS EXPERT

Industria molitoria
Milling

Agricoltura, viticoltura
Agricoltura, wine industry

Industria alimentare
Food industry

Fonderie
Foundries

Costruzione ed edilizia
Construction and building industry

Trattamento e processo dei materiali
Treatment-handling of materials

Miniere e attrezzature per cave
Mining and quarry

Trattamento e purificazionedell'aria
Treatment of air, purfung processes

Riciclaggio
Recycling

Imballaggio
Packaging

Macchine automatiche, formatrici, classificatrici, selezionatrici
Automatic machines fo

Immagazzinaggio
Storage

CONTENTS

TECHNICAL FEATURES

QUALITY

World class materials
Durable sealing
Premium bearings
Strong body design - FEM designed
Vacuum insulation
3D quality check

EFFICIENCY

Optimised power
Weight ratio
S1 continuous duty service
Optimized electric design

RELIABILITY

PTC thermistor 180 degrees
Specific grease retaining device
Tropicalised standard
IP66 protection
Class F insulation

FLEXIBILITY

Easy mass adjustment
Various voltages and frequencies available
Easy access to the terminal box
Multiple eye-bolts

INDUSTRIAL VIBRATION MOTOR (MV STANDARD SERIES) APPLICATION AND CASES

It is widely used in vibrator feeder, construction materials, sand/cement screening, material milling, flow conveyor, vibration separator, hoppyer emptying, bin activator, etc.

THREE PHASE (220V/380V) 2 POLES 3000/3600RPM 50/60HZ

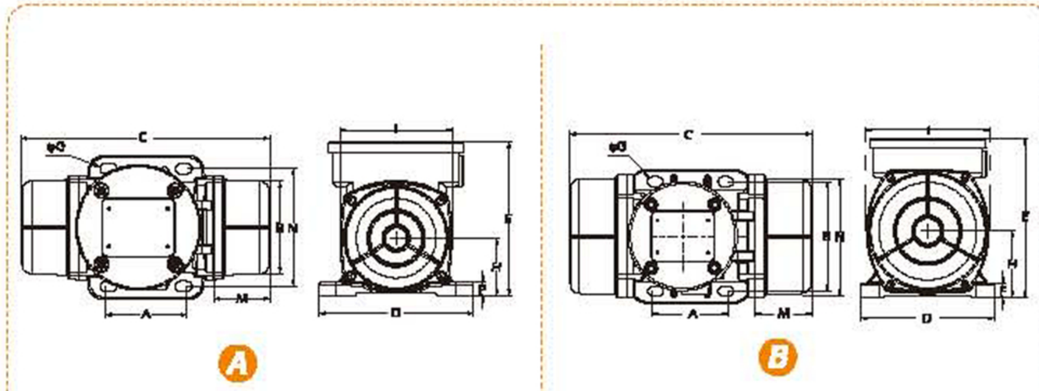

Model	Voltage (V)	Current A.Max(Y)	Input power (KW)	Force (KN)	Weight (KG)	Size
BMV40/3	220/380	0.13	0.05	0.3	2.4	size1
BMV60/3	220/380	0.16	0.08	0.7	4.6	size10
BMV100/3	220/380	0.19	0.1	1	4.7	size10
BMV200/3	220/380	0.35	0.18	2	6.3	size20
BMV202/3	220/380	0.35	0.18	2	6.8	size23
BMV300/3	220/380	0.52	0.27	3	9.9	size30
BMV400/3	220/380	0.58	0.3	4	10.2	size30
BMV500/3	220/380	0.96	0.5	5	16.7	size50
BMV700/3	220/380	1.25	0.66	7	17.2	size50
BMV800/3	220/380	1.45	0.75	8	21.8	size50
BMV1200/3	220/380	1.85	0.95	10	22.4	size50
BMV1300/3	220/380	2.44	1.3	13	23.0	size50
BMV1600/3	220/380	2.94	1.57	16	53.5	size60
BMV1800/3	220/380	3.75	1.8	18	54.5	size60
BMV2000/3	220/380	4.07	2	20	55	size60
BMV2200/3	220/380	4.07	2	22	55.5	size60
BMV2300/3	220/380	4.44	2.4	23	57	size60
BMV3200	220/380	5.3	2.9	32	103	size75
BMV4000/3	220/380	5.3	2.9	40	107	size75
BMV5000/3	220/380	7.22	4	50	111.2	size75
BMV6500/3	220/380	9.4	5.5	65	230	size85
BMV9000/3	220/380	17.8	10	90	241	size85
BMV12000/3	220/380	19	12.5	120	280	size90
BMV15000/3	220/380	27.5	18.8	150	340	size90

*Special voltage and frequency can be customized

Mounting Dimension Unit: mm

Model	A	B	ØG	C	D	E	F	H	I	L	M	N	Cable gland	Fig
BMV40/3	62-74	110	5.5	72.5	10	68	29	34	32.5	21	68	/	M16×1.5	H
BMV60/3	62-74	106	6	211	130	136	12	48	94	121	45	86	M16×1.5	A
BMV100/3	62-74	106	6	221	130	136	12	48	94	121	50	86	M16×1.5	A
BMV200/3	62-74	106	9	231	131	159	15	64	121	123	54	112	M20×1.5	B
BMV202/3	62-74	106	9	218	164	140	25	82	176	159	53	110	M20×1.5	F
BMV300/3	90	125	11	253	155	175	15	79	142	163	45	131	M20×1.5	C
BMV400/3	90	125	11	273	155	175	15	79	142	163	55	131	M20×1.5	C
BMV500/3	120	170	17	362	208	210	22	94	180	205	78	170	M20×1.5	D
BMV700/3	120	170	17	362	208	210	22	94	180	205	78	170	M20×1.5	D
BMV800/3	120	170	17	321	208	210	22	94	180	205	58	170	M20×1.5	D
BMV1200/3	120	170	17	321	208	210	22	94	180	205	58	170	M20×1.5	D
BMV1300/3	120	170	17	321	208	210	22	94	180	205	58	170	M20×1.5	D
BMV1600/3	140	190	17	418	229	262	30	120	247	220	80	222	M25×1.5	D
BMV1800/3	140	190	17	418	229	262	30	120	247	220	80	222	M25×1.5	D
BMV2000/3	140	190	17	418	229	262	30	120	247	220	80	222	M25×1.5	D
BMV2200/3	140	190	17	418	229	262	30	120	247	220	80	222	M25×1.5	D
BMV2300/3	140	190	17	418	229	262	30	120	247	220	80	222	M25×1.5	D
BMV3200	155	255	25	538	302	318	35	147	295	273	115	264	M32×1.5	D
BMV4000/3	155	255	25	538	302	318	35	147	295	273	115	264	M32×1.5	D
BMV5000/3	155	255	25	588	302	318	35	147	295	273	140	264	M32×1.5	D
BMV6500/3	200	320	28	624	385	102	40	203	394	364	130	378	M32×1.5	D
BMV9000/3	200	320	28	624	385	102	40	203	394	364	130	378	M32×1.5	D
BMV12000/3	125	380	39	648	452	415	40	205	394	388	130	378	M32×1.5	E
BMV15000/3	125	380	39	648	452	415	40	205	394	388	130	378	M32×1.5	E

THREE PHASE (220V/380V) 4 POLES 1500/1800RPM 50/60HZ

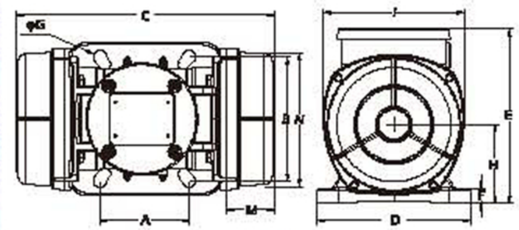

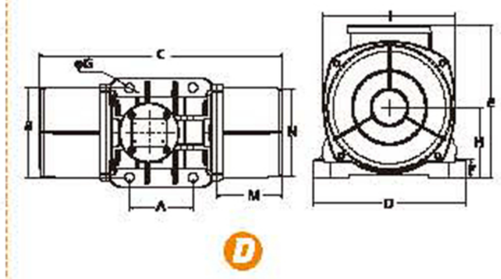

Model	Voltage (V)	Current A.Max(Y)	Input power (KW)	Force (KN)	Weight (KG)	Size
BMV40/15	220/380	0.26	0.04	0.3	4.6	size10
BMV90/15	220/380	0.31	0.12	0.9	6.8	size20
BMV200/15	220/380	0.49	0.16	2	12.8	size30
BMV250/15	220/380	0.54	0.18	2.5	12.9	size30
BMV300/15	220/380	0.62	0.20	3	13.8	size30
BMV400/15	220/380	0.84	0.30	4	19.6	size50
BMV500/15	220/380	1.06	0.35	5	21.0	size50
BMV700/15	220/380	1.32	0.62	7	28.2	size50
BMV800/15	220/380	1.36	0.65	8	29.1	size50
BMV1100/15	220/380	1.4	0.65	11	36.5	size50
BMV1400/15	220/380	1.78	0.90	14	60.5	size60
BMV1700/15	220/380	2.09	1.15	17	62.5	size60
BMV2400/15	220/380	3.2	1.6	24	68.0	size60
BMV2500/15	220/380	3.4	1.8	25	97.5	size70
BMV3000/15	220/380	3.68	1.9	30	110.0	size70
BMV3800/15	220/380	4.15	2.2	38	130.0	size75
BMV4300/15	220/380	4.5	2.5	43	145.0	size75
BMV5500/15	220/380	6.5	3.6	55	193	size80
BMV7200/15	220/380	8.5	5	72	253	size85
BMV9000/15	220/380	13.4	7.5	90	269	size85
BMV10000/15	220/380	14.4	7.8	100	329	size90
BMV11500/15	220/380	15.5	9	116	445	size100
BMV14500/15	220/380	18.5	11.5	141	460	size100

*Special voltage and frequency can be customized

Mounting Dimension Unit: mm

Model	A	B	ØG	C	D	E	F	H	I	L	M	N	Cable gland	Fig
BMV40/15	62-74	106	9	211	130	136	12	48	94	121	45	86	M16×1.5	A
BMV90/15	62-74	106	9	231	131	159	15	64	121	123	54	112	M20×1.5	B
BMV200/15	90	125	13	273	154	175	15	79	142	163	70	131	M20×1.5	C
BMV250/15	90	125	13	303	154	175	15	79	142	163	70	131	M20×1.5	C
BMV300/15	90	125	13	303	154	175	15	79	142	163	70	131	M20×1.5	C
BMV400/15	120	170	17	362	208	210	22	94	180	205	78	170	M20×1.5	D
BMV500/15	120	170	17	362	208	210	22	94	180	205	78	170	M20×1.5	D
BMV700/15	120	170	13	391	208	210	22	94	180	205	93	170	M20×1.5	D
BMV800/15	120	170	13	391	208	210	22	94	180	205	93	170	M20×1.5	D
BMV1100/15	120	170	17	451	208	210	22	94	180	205	123	170	M20×1.5	D
BMV1400/15	140	190	17	448	229	262	30	120	247	220	96	222	M25×1.5	D
BMV1700/15	140	190	17	448	229	262	30	120	247	220	96	222	M25×1.5	D
BMV2400/15	140	190	17	514	229	262	30	120	247	220	129	222	M25×1.5	D
BMV2500/15	155	225	22	522	272	295	40	141	267	250	123	235	M25×1.5	D
BMV3000/15	155	225	22	522	272	295	40	141	267	250	123	235	M32×1.5	D
BMV3800/15	155	255	23.5	588	302	318	35	147	295	273	140	264	M32×1.5	D
BMV4300/15	155	255	23.5	588	302	318	35	147	295	273	140	264	M32×1.5	D
BMV5500/15	180	280	26	603	332	360	37	167	345	304	143	310	M32×1.5	D
BMV7200/15	200	320	28	624	385	402	40	203	394	360	130	378	M32×1.5	D
BMV9000/15	200	320	28	624	385	402	40	203	394	360	130	378	M32×1.5	D
BMV10000/15	125	380	39	728	452	415	40	205	394	380	170	378	M32×1.5	E
BMV11500/15	140	440	45	890	530	484	37	232	446	470	210	424	M32×1.5	E
BMV14500/15	140	440	45	890	530	484	37	232	446	470	210	424	M32×1.5	E

THREE PHASE (220V/380V) 6 POLES 1000/1200RPM 50/60HZ

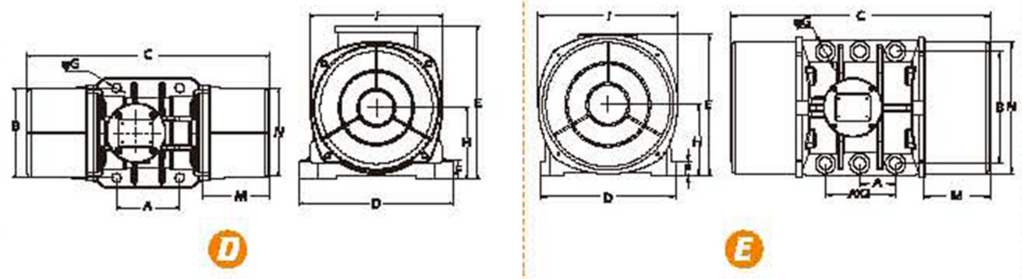

Model	Voltage (V)	Current A.Max(Y)	Input power (KW)	Force (KN)	Weight (KG)	Size
BMV50/1	220/380	0.38	0.12	0.5	13.1	size30
BMV100/1	220/380	0.42	0.12	1	13.8	size30
BMV200/1	220/380	0.48	0.18	1.8	21.0	size50
BMV300/1	220/380	0.67	0.35	3	29.1	size50
BMV400/1	220/380	0.78	0.37	4	33.3	size50
BMV500/1	220/380	1.2	0.55	5	36.5	size50
BMV800/1	220/380	1.26	0.75	7.8	62.5	size60
BMV1100/1	220/380	1.42	0.75	11	80.0	size60
BMV1400/1	220/380	1.95	1	14	82.0	size60
BMV1500/1	220/380	2	1	15	84.0	size60
BMV1600/1	220/380	2.06	1.10	16	86.0	size60
BMV1620/1	220/380	2.06	1.1	16	127.0	size70
BMV2100/1	220/380	2.88	1.5	21	129.0	size70
BMV2600/1	220/380	3.63	1.96	26	143.0	size75
BMV3000/1	220/380	4.17	2.2	30	152.0	size75
BMV3800/1	220/380	5.5	2.5	38	216.0	size80
BMV4700/1	220/380	6.5	3.2	47	231.0	size80
BMV5200/1	220/380	6.92	3.8	52	280.0	size85
BMV6500/1	220/380	7.6	4.3	65	305	size85
BMV8000/1	220/380	12.6	7.1	80	325	size85
BMV9000/1	220/380	13.2	7.5	90	338	size85
BMV10000/1	220/380	14	7.6	100	386	size90
BMV13001/1	220/380	16.4	10	130	422	size90
BMV15000/1	220/380	18	11	144	672	size105
BMV17500/1	220/380	21	12	176	744	size105
BMV19500/1	220/380	24	12	199	768	size105
BMV22000/1	220/380	28	13.95	223	916	size110
BMV25000/1	220/380	28	13.95	250	994	size110

*Special voltage and frequency can be customized

Mounting Dimension Unit: mm

Model	A	B	ØG	C	D	E	F	H	J	L	M	N	Cable gland	Fig
BMV50/1	90	125	11	273	154	175	15	79	142	163	55	131	M20×1.5	C
BMV100/1	90	125	11	303	154	175	15	79	142	163	70	131	M20×1.5	C
BMV200/1	120	170	17	362	208	210	22	94	180	205	78	170	M20×1.5	D
BMV300/1	120	170	17	391	208	210	22	94	180	205	93	170	M20×1.5	D
BMV400/1	120	170	17	451	208	210	22	94	180	205	123	170	M20×1.5	D
BMV500/1	120	170	17	451	208	210	22	94	180	205	123	170	M20×1.5	D
BMV800/1	140	190	17	448	229	262	30	120	247	220	96	222	M25×1.5	D
BMV1100/1	140	190	17	514	229	262	30	120	247	220	129	222	M25×1.5	D
BMV1400/1	140	190	17	562	229	262	30	120	247	220	154	222	M25×1.5	D
BMV1500/1	140	190	17	562	229	262	30	120	247	220	154	222	M25×1.5	D
BMV1600/1	140	190	17	562	229	262	30	120	247	220	154	222	M25×1.5	D
BMV1620/1	155	225	22	556	272	295	40	141	267	250	140	235	M20×1.5	D
BMV2100/1	155	225	22	650	272	295	40	141	267	250	200	235	M20×1.5	D
BMV2600/1	155	255	23.5	708	302	318	35	147	295	273	200	264	M32×1.5	D
BMV3000/1	155	255	23.5	708	302	318	35	147	295	273	200	264	M32×1.5	D
BMV3800/1	180	280	26	683	332	354	35	170	330	317	183	311	M32×1.5	D
BMV4700/1	180	280	26	733	332	354	35	170	330	317	208	311	M32×1.5	D
BMV5200/1	200	320	28	704	385	402	40	203	394	364	170	378	M32×1.5	D
BMV6500/1	200	320	28	704	385	402	40	203	394	364	170	378	M32×1.5	D
BMV8000/1	200	320	28	774	385	402	40	203	394	364	205	378	M32×1.5	D
BMV9000/1	200	320	28	774	385	402	40	203	394	364	205	378	M32×1.5	D
BMV10000/1	125	380	39	908	452	415	40	205	394	388	260	378	M32×1.5	E
BMV13001/1	125	380	39	908	452	415	40	205	394	388	260	378	M32×1.5	E
BMV15000/1	140	480	45	980	570	542	48	268	510	560	210	490	M32×1.5	E
BMV17500/1	140	480	45	1060	570	542	48	268	510	560	250	490	M32×1.5	E
BMV19500/1	140	480	45	1060	570	542	48	268	510	560	250	490	M32×1.5	E
BMV22000/1	140	520	45	1130	610	594	42	297	560	560	285	530	M32×1.5	E
BMV25000/1	140	520	45	1130	610	594	42	297	560	560	285	530	M32×1.5	E

THREE PHASE (220V/380V) 8 POLES 750/900RPM 50/60HZ

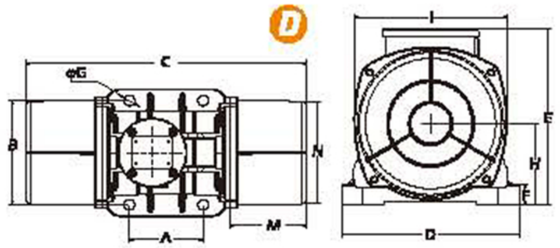

Model	Voltage (V)	Current A.Max(Y)	Input power (KW)	Force (KN)	Weight (KG)	Size
BMV750/0.75	220/380	1.14	0.23	1	27	size40
BMV250/0.75	220/380	0.9	0.35	2	29	size50
BMV400/0.75	220/380	0.9	0.35	2.5	34	size50
BMV650/0.75	220/380	1.2	0.5	4.5	63	size60
BMV900/0.75	220/380	1.23	0.65	6	70	size60
BMV1300/0.75	220/380	2.2	1.2	9	90	size70
BMV2100/0.75	220/380	2.81	1.5	15	150	size75
BMV3100/0.75	220/380	4.5	2	21	201	size80
BMV3800/0.75	220/380	6	2.5	25	219	size80
BMV4200/0.75	220/380	7.15	2.9	30	268	size85
BMV5300/0.75	220/380	8	4	35	289	size85
BMV6500/0.75	220/380	8.78	5	45	308	size85
BMV10000/0.75	220/380	13.5	6.8	70	422	size90

*Special voltage and frequency can be customized

Mounting Dimension Unit: mm

Model	A	B	ØG	C	D	E	F	H	I	L	M	N	Cable gland	Fig
BMV150/0.75	105	140	13	330	170	196	20	92	174	166	78	160	M20×1.5	D
BMV250/0.75	120	170	17	391	208	210	22	96	185	192	97	170	M20×1.5	D
BMV400/0.75	120	170	17	455	208	210	22	96	185	192	129	170	M20×1.5	D
BMV650/0.75	140	190	17	446	230	260	26	124	240	218	112	222	M25×1.5	D
BMV900/0.75	140	190	17	490	230	260	26	124	240	218	134	222	M25×1.5	D
BMV1300/0.75	155	225	22	563	275	290	30	140	256	250	154	236	M25×1.5	D
BMV2100/0.75	155	255	23.5	692	304	314	30	147	285	277	205	265	M32×1.5	D
BMV3100/0.75	180	280	26	683	332	354	32	170	330	312	183	311	M32×1.5	D
BMV3800/0.75	180	280	26	733	332	354	32	170	330	312	208	311	M32×1.5	D
BMV4200/0.75	200	320	28	704	385	402	40	203	394	360	170	378	M32×1.5	D
BMV5300/0.75	200	320	28	704	385	402	40	203	394	360	170	378	M32×1.5	D
BMV6500/0.75	200	320	28	774	385	402	40	203	394	360	205	378	M32×1.5	D
BMV10000/0.75	125	380	39	948	452	415	40	205	394	380	280	378	M32×1.5	E

SINGLE PHASE (220V) 2 POLES 3000RPM 50HZ

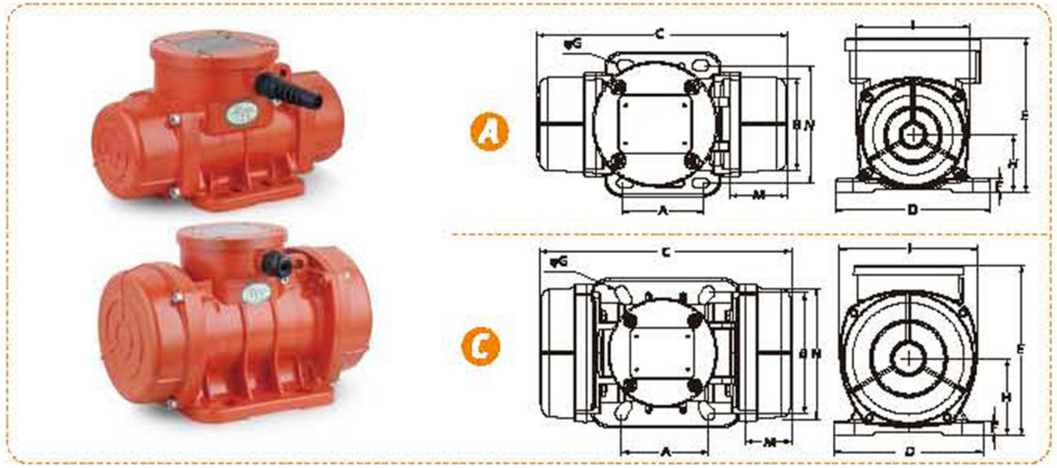

Mounting Dimension Unit: mm

Model	Voltage (V)	Current A.Max	Input power (KW)	Force (KN)	Weight (KG)	Size
BMV60/3M	220V	0.43	0.08	0.6	4.5	size10
BMV100/3M	220V	0.54	0.1	1	5.1	size10
BMV200/3M	220V	0.71	0.13	2	6.8	size20
BMV300/3M	220V	1.58	0.29	3	10	size30
BMV400/3M	220V	1.68	0.31	4	10.8	size30

*Special voltage and frequency can be customized

Mounting Dimension Unit: mm

Model	A	B	C	D	E	F	ØG	H	I	L	M	N	Cable gland	Fig
BMV60/3M	62-74	106	211	130	136	12	9	48	94	121	45	86	M16×1.5	A
BMV100/3M	62-74	106	221	130	136	12	9	48	94	121	50	86	M16×1.5	A
BMV200/3M	62-74	106	231	130	159	15	9	64	120	123	54	112	M20×1.5	B
BMV300/3M	90	125	255	155	177	14	13	79	142	163	45	132	M20×1.5	C
BMV400/3M	90	125	275	155	177	14	13	79	142	163	55	132	M20×1.5	C

DC CURRENT 12V 24V 3000RPM

F

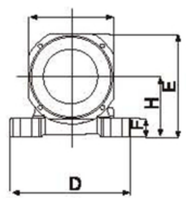

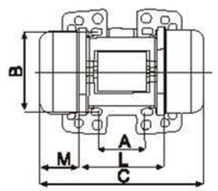

G

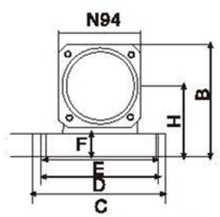

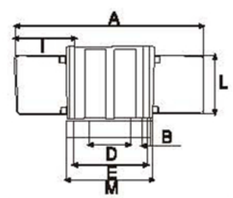

Model	Voltage	Current	Input power	Force		RPM	Weight	Size
	(V)	(A)	(KW)	(kg)	(kN)		(kg)	
BMV50DC-24	24V	4.2	0.1	50	0.5	3600	4.5	size10
BMV50DC-12	12V	9.4	0.1	50	0.5	3600	4.5	size10
BMV200DC-24	24V	6.67	0.16	200	2	3600	6.5	size23
BMV200DC-12	12V	13.3	0.16	200	2	3600	6.5	size23
BZF18-50D-12	12V	13.8	0.18	300	3	3600	6.8	size23
BZF18-50D-24	24V	6.9	0.18	300	3	3600	6.8	size23

*Special voltage and frequency can be customized

Mounting Dimension Unit: mm

Model	A	B	C	D	E	F	ØG	H	I	L	M	N	Cable gland	Fig
BMV50DC-24	62-74	106	211	130	136	12	9	48	94	121	45	86	M16×1.5	A
BMV50DC-12	62-74	106	211	130	136	12	9	48	94	121	45	86	M16×1.5	A
BMV200DC-24	62-74	106	218	164	140	25	9	82	116	123	53	110	M20×1.5	F
BMV200DC-12	62-74	106	218	164	140	25	9	82	116	123	53	110	M20×1.5	F
BZF18-50D-12	282.5	127.5	161	60 115	140 135	27	13	80.5	88.75	88.7	137	94	M20×1.5	G
BZF18-50D-24	282.5	127.5	161	60 115	140 135	27	13	80.5	88.75	88.7	137	94	M20×1.5	G

MICRO VIBRATION MOTOR (ALUMINIUM)

H

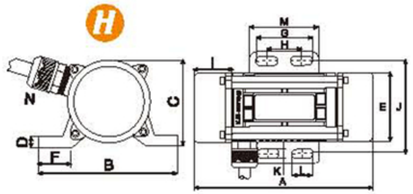

Single Phase 110V/220V 2 Poles 3000/3600RPM 50/60Hz

Model	Voltage	Current	Input power	RPM		Force	Size
	(V)	(A)	(KW)	50Hz	60Hz	(KG)	
BMV40/2M-2	220/110	0.148/0.351	0.04	3000	3600	46	size2

*Special voltage and frequency can be customized

Three Phase 220V/380V 2 Poles 3000/3600RPM 50/60Hz

Model	Voltage	Current	Input power	RPM		Force	Size
	(V)	(A)	(KW)	50Hz	60Hz	(KG)	
BMV40/2-2	380/220	0.121/0.152	0.04	3000	3600	46	size2

Mounting Dimension Unit: mm

Model	A	B	C	D	E	F	G	H	I	J	K	L	M	N
1	153	110	65	10	68	33	55	28	31	91.5	9	21	55	M-16
2	170	110	72.5	10	68	29	55	34	32.5	91.5	9	21	68	M-16

MICRO VIBRATION MOTOR (STAINLESS STEEL)

I

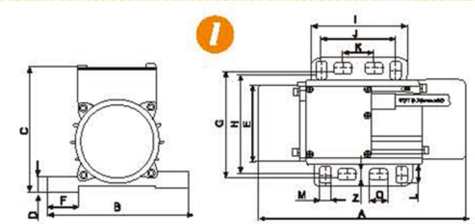

Single Phase 110V/220V 2 Poles 3000/3600RPM 50/60Hz

Model	Voltage	Current	Input power	RPM		Force	Size
	(V)	(A)	(KW)	50Hz	60Hz	(kg)	
BMV40/2SM-3	220/110	0.148/0.351	0.04	3000	3600	46	size3

Three Phase 220V/380V 2 Poles 3000/3600RPM 50/60Hz

Model	Voltage	Current	Input power	RPM		Force	Size
	(V)	(A)	(KW)	50Hz	60Hz	(kg)	
BMV40/2S-3	380/220	0.121/0.152	0.04	3000	3600	46	size3

Mounting Dimension Unit: mm

Model	A	B	C	D	E	F	G	H	I	J	K	L	M	N
3	153	110	65	10	68	33	55	28	31	91.5	9	21	55	M-16
4	170	110	72.5	10	68	29	55	34	32.5	91.5	9	21	68	M-16

MICRO VIBRATION MOTOR (ALUMINIUM)

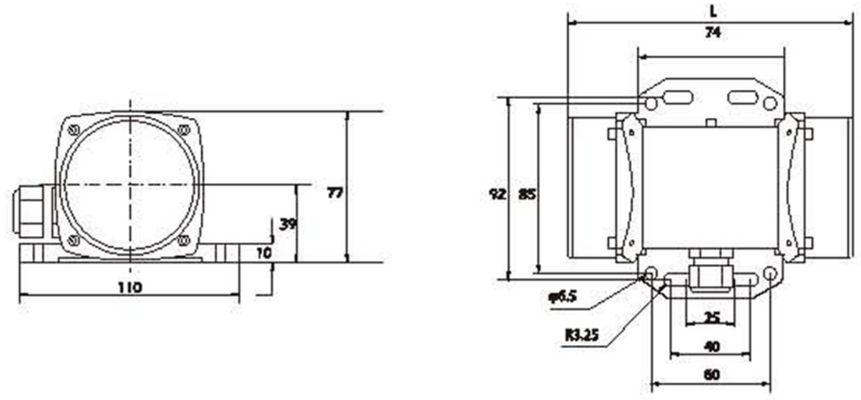

Model	Voltage	Current	Input power	Force		RPM	Weight	Total length	Cable length
	(V)	(A)	(kW)	(kg)	(kN)		(kg)	(mm)	(mm)
BMV 21M	220	0.1	30	22	0.2	3000	1.8	145	1+1
BMV 41M	220	0.4	70	40	0.4	3000	2.2	161	1+1
BMV 21	380	0.11	30	22	0.2	3000	1.8	145	1
BMV 41	380	0.25	70	40	0.4	3000	2.2	161	1

HF HIGH FREQUENCY EXTERNAL CONCRETE VIBRATOR

Application & features

1. Used for pre-fabrication railway, highway, bridges.
2. High vibration frequency 100-180Hz, big centrifugal force 12-18KN, small amplitude, wide radiation range, fast forming, less quantity than normal, longer service time.

BGZF150A

BGZF150B

BGZ100

Model	Ferquency		Force	Power	Current	Weight
	(Hz)	(r/min)	(kN)	(kW)	380V(A)	(kg)
BGZF150A	75	10800	12	1.5	3.94	22.7
BGZF150B	75	10800	12	1.5	3.94	20.25
BGZ100	100	6000	18	2.0	3.08	28.2

External contrete vibrator

BZF330-50

BZF150-50

BZF110-50

BZW-10

BZW-2.5

Model	Ferquency		Force	Power	Current	Weight
	(Hz)	(r/min)	(kN)	(kW)	380V(A)	(kg)
BZF25-50	50	3000	2	0.25	0.60	6
BZF55-50	50	3000	4	0.55	1.45	14
BZF110-50	50	3000	5	1.1	2.44	15.5
BZF150-50	50	3000	7	1.5	3.24	24
BZFZ20-50	50	3000	9	2.2	4.26	28
BZF330-50	50	3000	12	3.0	5.30	35
BZW-12	50	3000	12	3.0	5.30	49
BZW-10	50	3000	10	2.2	4.26	30
BZW-7	50	3000	7	1.5	3.24	17
BZW-5	50	3000	5	1.1	2.44	16
BZW-3.5	50	3000	3.5	0.75	1.6	14
BZW-2.5	50	3000	2.5	0.25	0.60	8

INSTALLATION

MOUNTING

The baseplate surface where the vibrator motor is mounted, has an allowable tolerance of 0.08mm, so shat the surface rests uniformly against each other to avoid internal tension, that may cause breakage of the foot of the vibrator motor.

Use 8.8 class bolts, 8.0 class nuts and flat washers that belongs to category A EN ISO 7089/7092

The graph below shows the correct torque settings for the different bolt sizes used on the motor vibrators.

ELECTRICAL CONNECTION

Make sure the voltage and frequency supply match the ones indicated on the rating plate of the electric vibraotr. Insert the power cable through the cable gland, Use only couductors thathave a suitable cross-section. Connent the laed wire to the pins [as shown in the diagram below] and tighten them with the specified torque.

Do not forget to fix the earthing cable to the provided studs [compulsory connection] !

Before closing the junction box make sure the cover gasket is properly fitted in order to keep the specified IP protection.

For more details about motor installation refer to product manuals.

FIXING

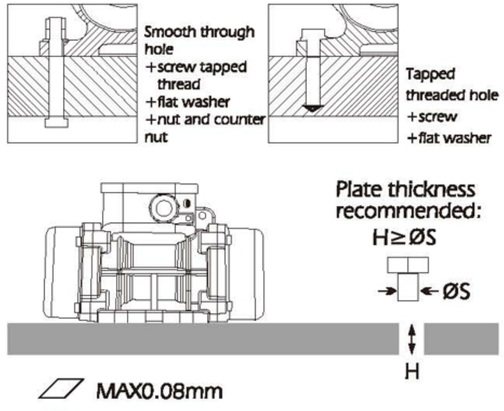

INSTALLATION

Junction box nuts tightening torque		
Mertic	Nm	Mertic
M4	2.5	1.84
M5	4	2.95
M6	5	3.69
M8	6	4.43
M10	8	5.90

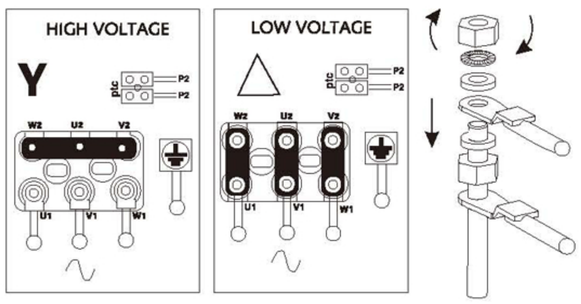

OVERLOAD PROTECTION

All electic vibrators MUST be connected to a suitable external overload protection. When using two electric vibrators in sync, each of them has to be connected to an external overload protector and these overload protectors must be interlocked to make sure both motors are stopped if one fails.

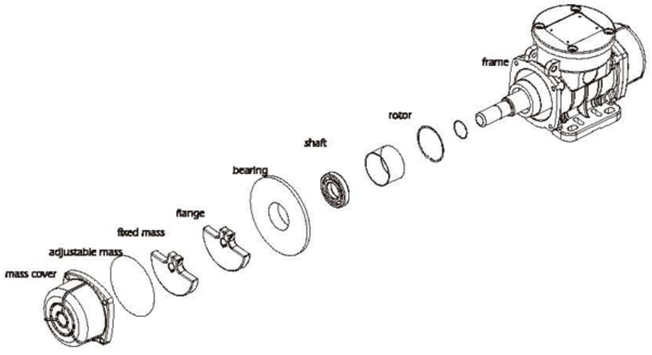

CENTRIFUGAL FORCE ADJUSTMENT

ADJUSTABLE MASSES - TYPE A

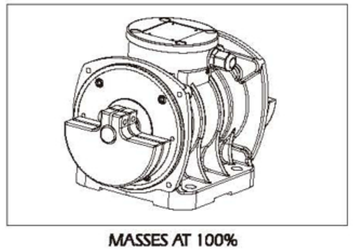

MASSES AT 100%

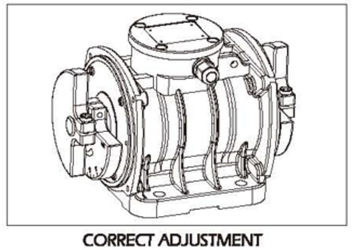

CORRECT ADJUSTMENT

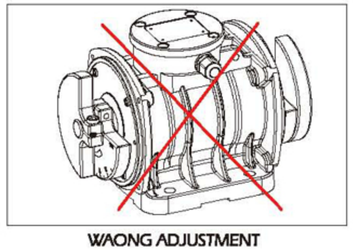

WAONG ADJUSTMENT

Rotate the mass following the design on the plate: from the thicker tip towards the thin tip.

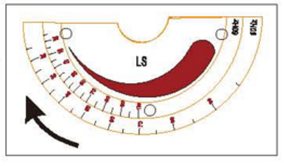

Rotate the masses in the opposite direction to the cable gland.

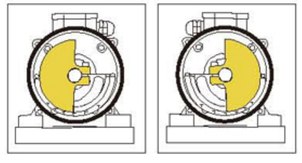

ADJUSTABLE MASSES - TYPE B

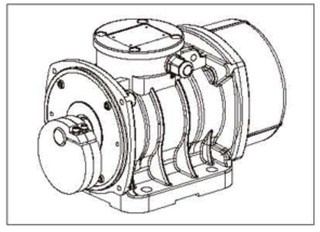

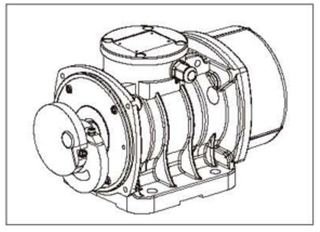

The notch in the mass indicates the degree ofadjustment.

Rotate the mass following the design on the plate: from the thicker tip towards the thin tip

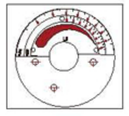

ADJUSTABLE MASSES - TYPE C (BLADE MASSES)

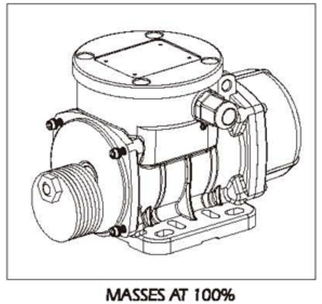

MASSES AT 100%

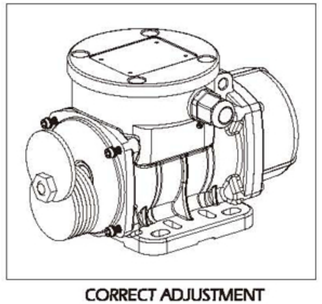

CORRECT ADJUSTMENT

! WARNING: DO NOT grease new motors before installation.

All motors come from the factory already filled with the right quantity of grease.

Number of blades	5+5	8+8	9+9	12+12	13+13
The fore reduced if turn up one blade on both side	40	25	22.2	16.7	15.4